LAMP AILERON STAY FOR OLYMPIA ARN-3 Upward Opening Model NEW

Latest Info

Opening Direction	Features	Door Material	Type	Maximum Door Moment
	Lift-assist Soft-close Free-stop	Wood	M	4.0 - 6.0 N·m/pc (40.8~61.2 kgf·cm/pc)
			H	6.0 - 8.0 N·m/pc (61.2~81.6 kgf·cm/pc)

- Smooth door movement. It is specially designed for use with the OLYMPIA concealed hinge (360-D26-19 / H360-D26-26T).
- The lift-assist function allows for light opening of doors.
- The force of lift-assist is adjustable.
- The soft-close function makes doors close gently (0°–30° degrees).
- Integrated design combines a concealed hinge and lid stay.
- The free-stop function enables doors to hold in position.
- Closing speed of doors is adjustable.

Door Movements

Lift-assist
Allows for light opening of doors

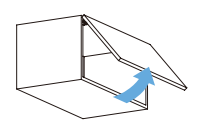
Light opening

Soft-close
OLYMPIA's damper makes doors close slowly. (0° - 30°)

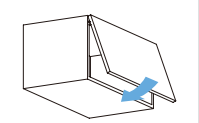
Gently closing

Free-stop
Enables doors to hold in position.

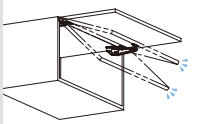
Holds in position

INSTRUCTION | SCREW

Specifications
- Operating temperature: 0°C~40°C

Parts Included
- Door-side mounting plate
- Countersunk head tapping screw 3.5 × 1.5
  (for attaching the mounting plate to AILERON)
- Binding head tapping screw 3.5 × 1.5
  (for attaching the door-side mounting plate, mounting plate for AILERON, and AILERON)

Optional Parts
- Hinge spacer 360-BCS
- Aileron spacer ARN-DP

Sold Separately
- Mounting plate for AILERON
- OLYMPIA concealed hinge
- Mounting plate for OLYMPIA

Feature | Feature | Selection Tool
Damper Stay

Installation

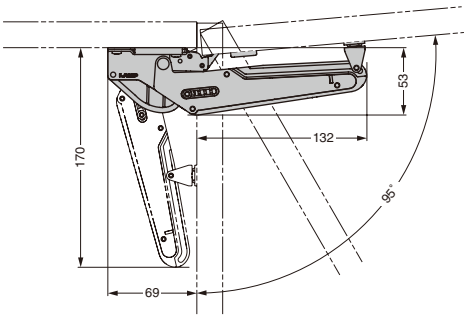

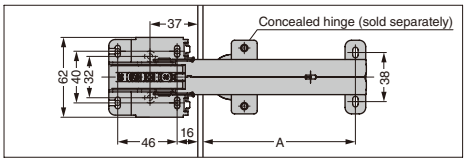

Hinge Used	A
360-D26-19T	118
H360-D26-26T	116

Please see pages of Olympia hinges for installation dimensions.

Application Example

Aileron Stay Sold singly

Item Code	Item Name	Material	Finish / Colour	Type	Max. Door Moment N·m/pc	Max. Door Moment kgf·cm/pc	Box (pc)	Carton (pc)
180-043-947	ARN-3-M-GR	Steel (SPCC) / POM	Nickel plating / Grey	M	4.0~6.0	40.8~61.2	1	20
180-043-948	ARN-3-H-GR			H	6.0~8.0	61.2~81.6	1	20
180-049-503	ARN-3-M-BL		Nickel plating / Black	M	4.0~6.0	40.8~61.2	1	20
180-049-504	ARN-3-H-BL			H	6.0~8.0	61.2~81.6	1	20

Standard Set Including parts sold separately

Item Code	Item Name	Door Width	Max. Door Moment N·m	Max. Door Moment kgf·cm	Set Contents	Box (pc)	Carton (pc)
180-045-659	ARN-3-M-GR-S	450~900	4.0~6.0	40.8~61.2	Aileron stay, Mounting plate for Aileron stay, Olympia hinge, Mounting plate for Olympia hinge, Screws	1	10
180-045-660	ARN-3-H-GR-S		6.0~8.0	61.2~81.6		1	10
180-049-507	ARN-3-M-BL-S		4.0~6.0	40.8~61.2		1	10
180-049-508	ARN-3-H-BL-S		6.0~8.0	61.2~81.6		1	10

Combined unit attaches to the top of the cabinet

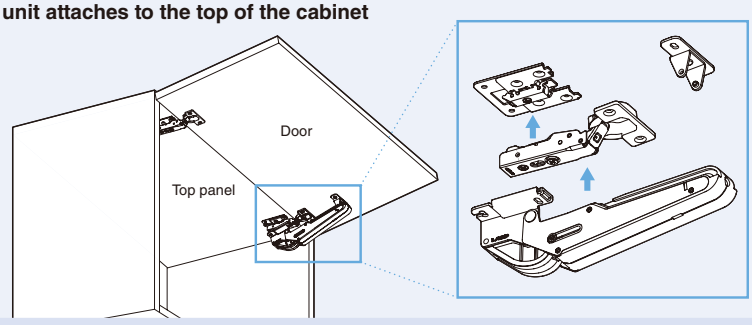

Simple installation only requires AILERON to be placed on OLYMPIA with a mounting plate designed for AILERON

This information provides a range of quality for the component. It does not ensure the performance or safety of the final product incorporating the component.

Components for a single door

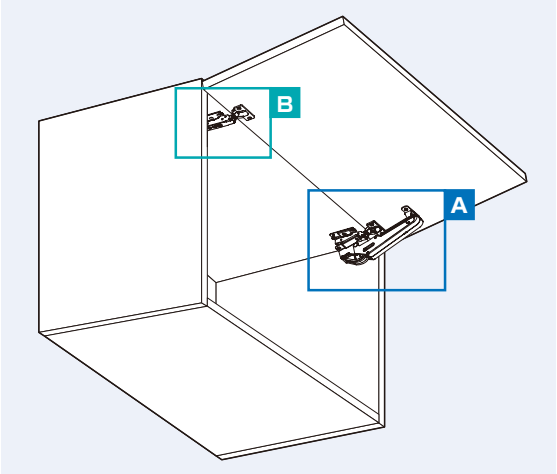

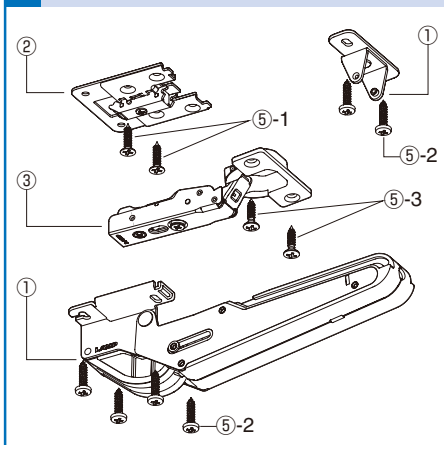

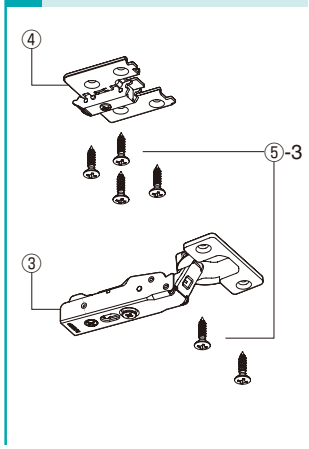

Necessary parts per door (A + B)

[Notes]
The required quantity depends on door width and moment.

		Item Code	Item Name	Door Width [mm] 450~900				900~1600				1600~2000			
				Door Moment [N·m] 4.0~6.0	6.0~8.0	8.0~12.0	12.0~16.0	4.0~6.0	6.0~8.0	8.0~12.0	12.0~16.0	4.0~6.0	6.0~8.0	8.0~12.0	12.0~16.0
				Standard Set											
AILERON	① Stay	180-043-947/ 180-049-503	ARN-3-M-GR/ ARN-3-M-BL	1	-	2	-	1	-	2	-	1	-	2	-
AILERON	① Stay	180-043-948/ 180-049-504	ARN-3-H-GR/ ARN-3-H-BL	-	1	-	2	-	1	-	2	-	1	-	2
AILERON	② Plate	180-043-949	ARN-SZ	1		2		1		2		1		2	
OLYMPIA	③ Hinge	160-026-840/ 160-029-084	360-D26-19T/ H360-D26-26T (Built-in damper)	2*3		3		2		3		2		3	
OLYMPIA	③ Hinge	160-026-836/ 160-029-081	360-26-19T/ H360-26-26T (Without catch)	-		-		1		-		2		-	
OLYMPIA	③ Hinge	160-026-832/ 160-029-078	360-C26-19T/ H360-C26-26T (With catch)	-		-		-				-		1	
OLYMPIA	④ Plate	160-026-846 *1	360-P6WT (System 32·4 holes)	1		1		2		1		3		2	
OLYMPIA	⑤ Screw	160-070-030	TAP3515NI	8*2		10*2		14*2		10*2		20*2		16*2	

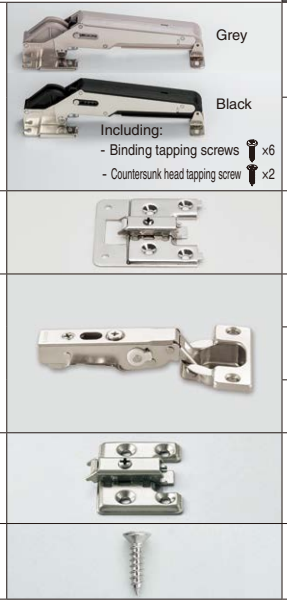

*1 ④Other available plates : 360-P4W-32T / 360-P4W-30T
*2 This is the required quantity when using with the 360-P6WT. The required number of screws is reduced by one for each unit of 360-P4W-32T or 360-P4W-30T that is used.
*3 The 360-D26-19T is included in the standard set.

LAMP. AILERON SPACER ARN-DP 2 and 5 mm Thick NEW

Latest Info

ARN-DP2 (2 mm)　　ARN-DP5 (5 mm)

- Specially designed for use with the AILERON stay (P.260).
- The ARN-DP2 decreases overlay of outset doors by 2 mm.
- The ARN-DP5 decreases overlay of outset doors by 5 mm.
- The ARN-DP2 can be doubled for 4 mm thickness.

How to Use

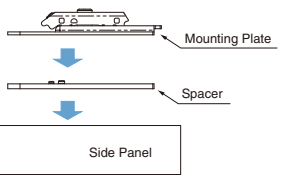

Set the spacer between the mounting plate and side panel.

SCREW

Available Mounting Plate
- ARN-SZ (P.261)

Remarks
- The included screws are for fixing the spacer (ARN-DP5) and mounting plate (ARN-SZ).
- Please use the optional screws if two ARN-DP2 are used.

Parts Included
- Cross-recessed binding head tapping screw 3.5 × 20 (Only the ARN-DP5 comes with these screws.)

Spacer

Item Code	Item Name	Colour	Type	Material	Box (pcs)	Carton (pcs)
180-046-667	ARN-DP2	Grey	+ 2 mm	POM	80	640
180-047-915	ARN-DP5		+ 5 mm (screw included)		80	640

Optional screw when using two ARN-DP2

Item Code	Item Name
180-046-669	TAP3520NI

Sold in sets of 4 screws.

This information provides a range of quality for the component. It does not ensure the performance or safety of the final product incorporating the component.